USC Dornsife
Department of Linguistics

nP-phasality at the level of phrasal nominalization

Zhendong Liu (zhendong@usc.edu) @NELS-57 (New York, NY)

1. Overview

A *Movement - case interaction* phenomenon in Lhasa Tibetan (LT) reveals several phasal properties of nP as phrasal nominalizations:

- delimits Spell-Out domains
- initiates movements to its specifier(s)
- Long distance movement across nP stops at its specifier.

2. Data & Generalizations

A transitive subject (*A*) in LT usually is ergative (ERG-*A*), but ABS-*A* is possible within a nominalization:

(1) tʂo.méː/*tʂò.ma tɕʰà sɵ̀-sóŋ
Sgrolma.ERG/*ABS tea make-EVID
'Sgrolma made tea.'

(2) tʂo.méː/tʂò.ma tɕʰà sɵ̀-**pà**-ɹè
Sgrolma.ERG/ABS tea make-**NMLZ**-COP
'Sgrolma made tea.'

(3) ŋéː [tʂo.méː/tʂo.ma (tʂá.ɕí-la) tɕʰà sɵ̀-**pa** (tì)] tʰóŋ-tɕʰòŋ
1sg.ERG Sgrolma.ERG/ABS (Bkrashis-DAT) tea make-**NMLZ** (DEF) see-EGO
'I saw Sgrolma making tea (for Bkrashis).'

Hypothesis: In LT, nominalizer morphology → nP structure presence

Generalization: Movement targeting the edge of nP bleeds ABS-A[1]

> *Local scrambling in "matrix nP" and embedded nP:*

(4) tɕʰà tʂò.méː/*tʂò.ma ~~tɕʰà~~ sɵ̀ː-pa-ɹe
tea Sgrolma.ERG/*ABS make-NMLZ-COP
'Sgrolma made tea.'

(5) ŋéː [tʂá.ɕí-la tʂò.méː/*tʂo.ma ~~tʂá.ɕí-la~~ tɕʰà sɵ̀-pa] tʰóŋ-tɕʰòŋ
1sg.ERG Bkrashis-DAT Sgrolma.ERG/*ABS tea make-NMLZ see-EGO
'I saw Sgrolma making tea for Bkrashis.'

> *Relativization:*

(6) ŋéː [[*Op* tʂò.méː/*tʂo.ma tʂá.ɕí-la ~~*Op*~~ sɵ̀-pè] tɕʰà] tóŋ-pà-jì̀ŋ
1sg Sgrolma.ERG/*ABS Bkrashis-DAT make-NMLZ.GEN tea drink-NMLZ-COP.EGO
'I drank the tea that Sgrolma made for Bkrashis.'

> **ABS-A as diagnostic of **successive cyclic** long distance scrambling:*

(7) tʂá.ɕí-là ŋéː [~~tʂá.ɕí-là~~ tʂò.méː/*tʂo.ma ~~tʂá.ɕí-là~~ tɕʰà sɵ̀-pa] tʰóŋ-tɕʰòŋ
Bkrashis-DAT 1sg.ERG Sgrolma.ERG/*ABS tea make-NMLZ see-EGO
'I saw Sgrolma making tea for Bkrashis.'

3. An analysis based on nP-phasality

Theoretical commitments & LT-specific proposals:

- nPs have phasal properties per Chomsky (2008 a.o.): initiate EF-related movements & phase complement Spell-Out.
- n introduces **only one EF** at a time, but multiple probings possible.
- Ergative assigned as morphological dependent case**, *during*** Spell-Out (cf. Baker 2015, technical details differ[2]).
- Local scrambling, relativization and intermediate movement triggered by ***different*** EFs.

Analysis:

- **ABS-*A*** as string vacuous local scrambling of external argument (Similar to Gu 2025 in spirit).

stage-1: Subject local scrambling and Spell-Out initiation proceed simultaneously

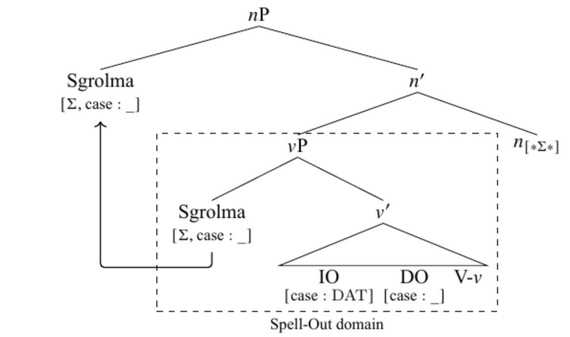

stage-2 (during Spell-Out): dependent case assignment followed by lower copy deletion, assuming a movement copy still count as a case competitor, but its case assignment doesn't affect all copies.

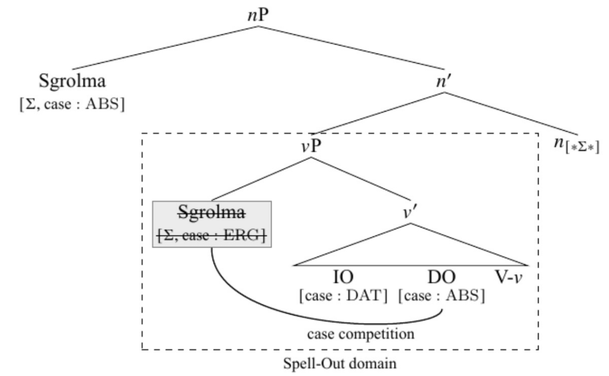

- **multiple scrambling**[3]: attested, and creates a "tuck-in" configuration (cf. Richards 1997, 2001).

(8) ŋéː [tʂá.ɕí-la tɕʰà tʂò.méː ~~tʂá.ɕí-la~~ ~~tɕʰà~~ sɵ̀-pa] tʰóŋ-tɕʰòŋ (cf. (3))

*O ABS-A: A in-situ → ERG-A; A scrambled → outer Spec,nP | **Op* ABS-A:

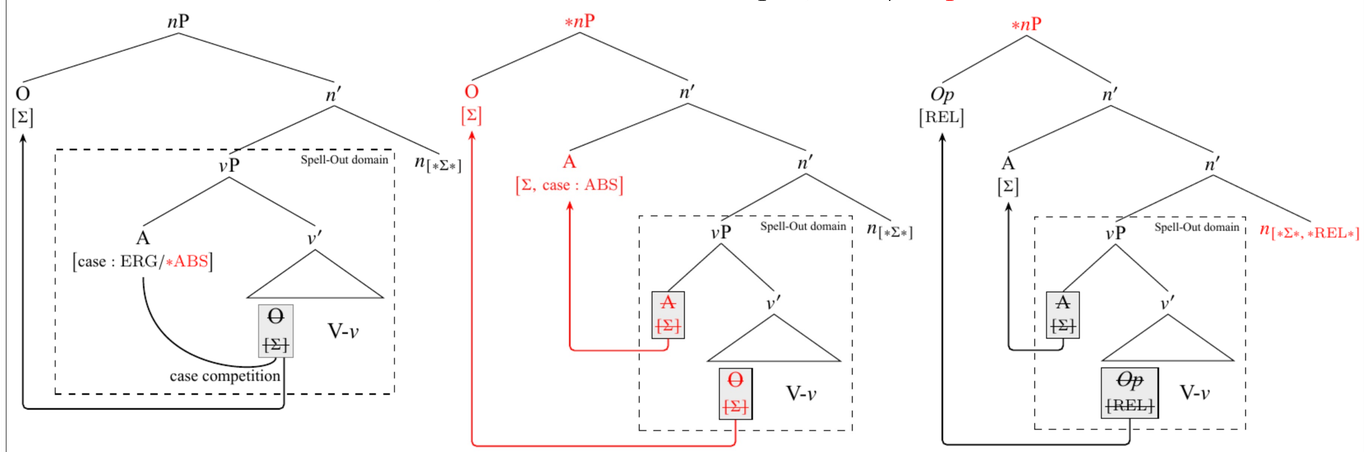

4. Discussions

- Previous lit. on **"ABS-A optionality"** in LT: enabled by imperfective Asp head (Gu 2025).
- **This study**: captures a stronger correlation -- between ABS-A optionality & a presence of NMLZ, and its interactions with various movements.
- Identifies core properties shared by nPs of different flavors.; facilitates future research on their divergence

5. footnotes

Refs: Baker, M. C. 2015. Case: its principles and its parameters; Chomsky, N. 2008 On phases; Gu, C. 2025. "Optional" ergativity in Tibetan: An AGREE-based approach. NELS-55.;Richards, N. 1997. What moves where when in which language?;2001. Movement in language: interactions and architectures.;